PORTEA STEEL DOORS & WINDOWS

OUT-SWING CASEMENT WINDOW

CLASSIC SERIES

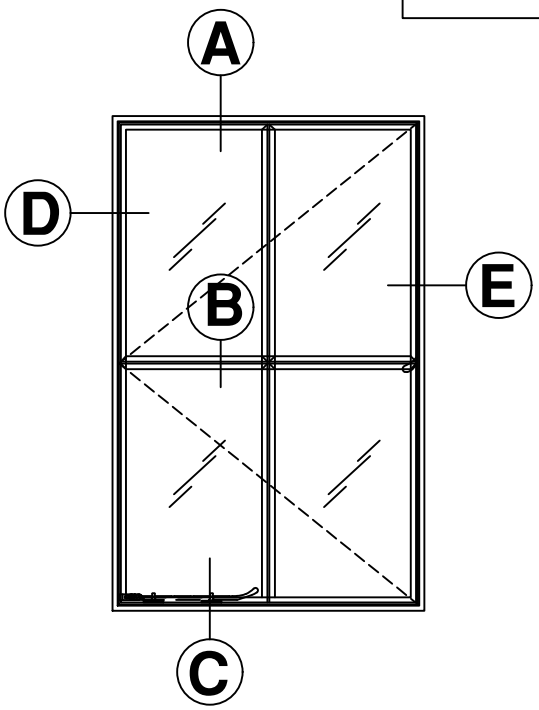

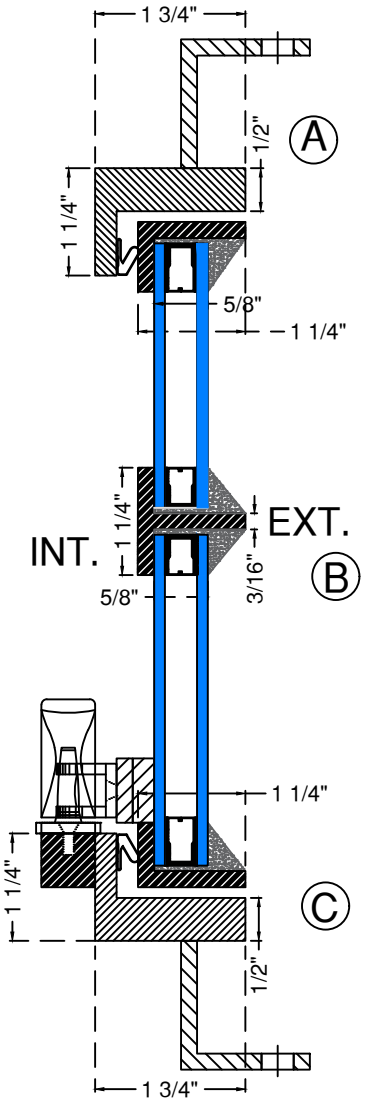

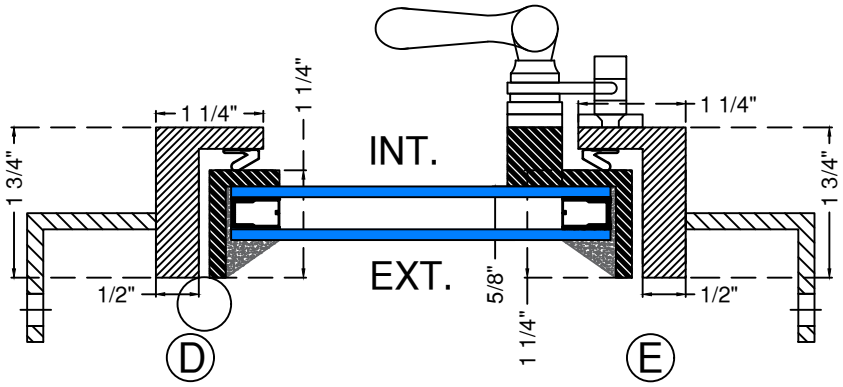

SPECIFICATIONS

C2000

PUSH OUT CASEMENT WINDOW
Carbon Steel(option stainless steel).

Window Hinge: Steel Post in Barrel w/Ball Bearings
Window Lock: Latch Sash Lock
Window operation: Stay Bar

Glazing:
Type: Double (Single and triple Available)
Glass: CARDINAL 366 over clear tempered
Spacer: Dark Bronze
Thickness: 5/8" Overall
Glazing Orientation: Exterior
Stop Type: Factory Wet Glazed
Muntin: 1-1/4" for TDL

Weather Strip:
Adhesive Backed

Sill:
Frame Depth: 1-3/4"

Finish:
Thermally Bonded Galvanized
Paint Finish Options Specify Color
Paint: Standard and Custom
2 coats of epoxy Base Primer
2 coats of Acrilic Lacquer Paint
3 coats of Clear Polyurethane

Patina finishes available as an upgrade

AUSTIN: 512-263-8851	DALLAS: 214-484-3134